ROHS

http://www.smtswitch.com

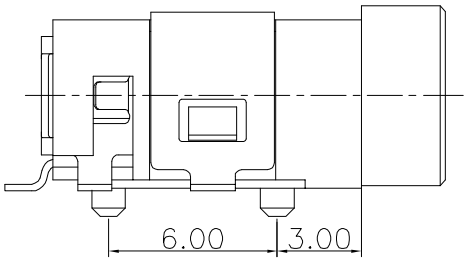

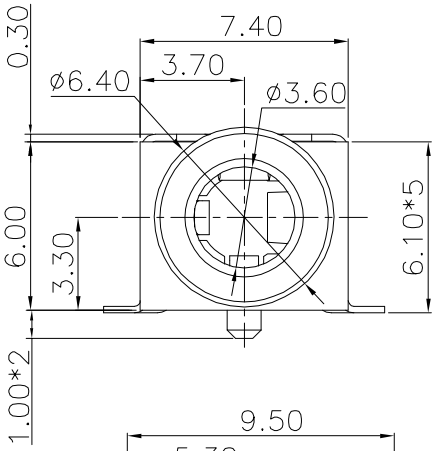

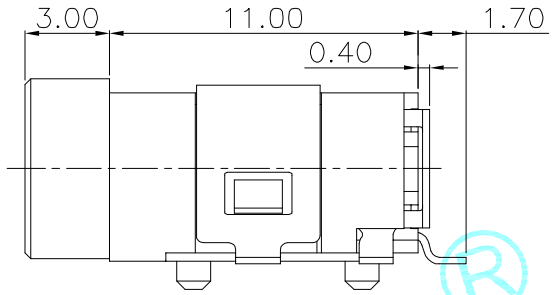

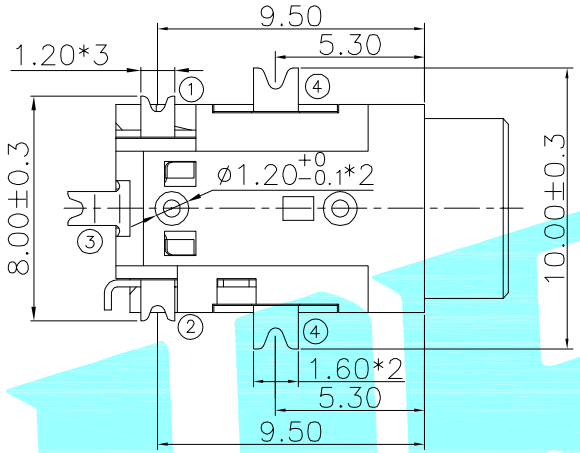

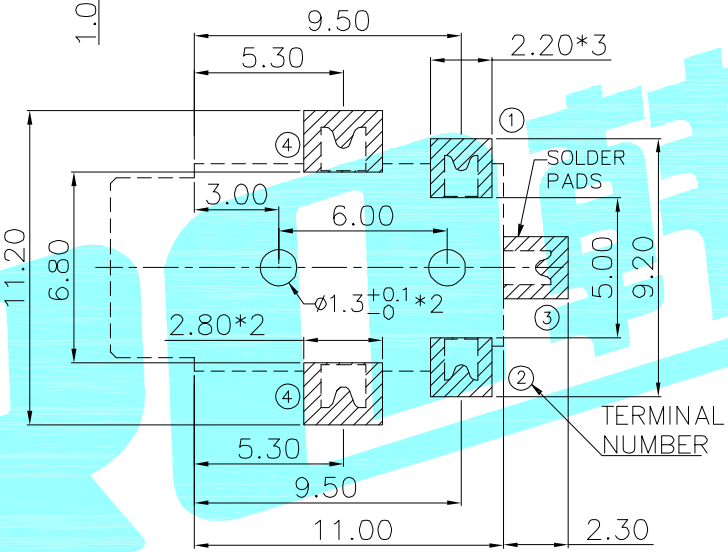

PAD LAYOUT (TOP)

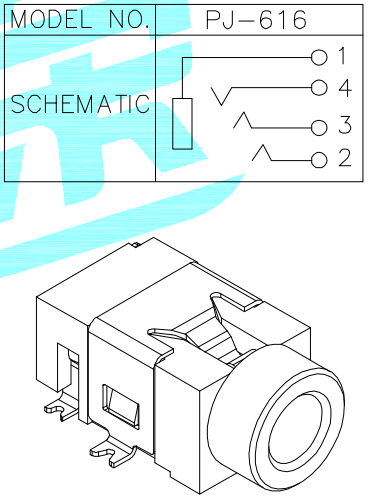

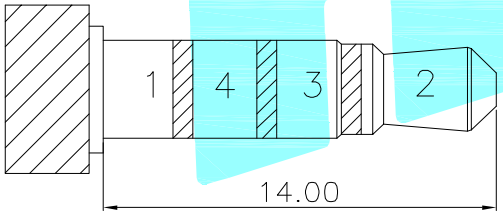

ø3.5 MATE PLUG

NOTES:

1. CONTACT CURRENT RATING: 12V 1A.
2. CONTACT RESISTANCE: 50mΩ MAX.;
3. INSULATION RESISTANCE: 100M MIN.500V DC;
4. DIELECTRIC WITHSTANDING: 500V AC MIN.;
5. DURABILITY: 5,000 CYCLES MIN.;
6. CONNECTOR MATING FORCES: 29.4N (3.00Kgf) MAX.;
7. CONNECTOR UNMATING FORCES: 2.94N(0.30Kgf) MIN.;

ITEM	PART NAME	Serial number	QTY.	MATERIAL	FINISHING	REMARK
⑤	Housing	———	1	Nylon	Black	———
④	Terminal 4	———	1	Copper Alloy	Plating Au	———
③	Terminal 3	———	1	Copper Alloy	Plating Au	———
②	Terminal 2	———	1	Copper Alloy	Plating Au	———
①	Terminal 1	———	1	Copper Alloy	Plating Au	———

APPROVALS		DATE
DRAWN	QIFENG.XU	2014.11.28
CHECKED		
APPROVALS		

HRO韩荣® ELECTRONICS CO.,LTD

TITLE:	PHONE JACK
PART NO.	PJ-616
UNIT: mm	SCALE: 1:1
DRAWING NO.	———
PROJ:	SHEET 1 OF 1

TOLERANCES ARE		
30~以上	±0.30	ANGLE
10~30	±0.20	
5~10	±0.15	±2°
~ 5	±0.10	

ECN NO.	REV.	DATE.	DESCRIPTION.	CHANGE.	CHECK.	APPRO.
———	A	———	NEW	———	———	———